Maintaining an electrosurgical machine

- Principles of operation
  - function
  - use
  - scientific principles
- construction
  - components
  - system diagram
  - inputs/outputs
- troubleshooting
  - identifying common faults
  - replacing components
  - rectifying faults
- preventive maintenance
  - replacing components
  - calibrating
- safety considerations
  - user and patient safety
  - electrical safety
- performance monitoring
  - calibration
  - quality assurance and control

13.5.4 Maintaining an electrosurgical machine

Unit B 13.6 Maintaining theatre and surgery equipment

Module 279 18 B Medical Instrumentation I

Electrosurgical machine: Use

Electro surgery is an alternative approach to cutting a patient. Typically, it is used as an alternative to a scalpel.

Electro surgery can cut like a scalpel, but can also coagulate the blood in small vessels so the surgical field is bloodless.

Electro surgery allows the surgeons to work faster as they do not have to tie off (close) every vessel they cut. The patient recovers better as there is less blood loss and there is more rapid healing.

an Electrosurgical machine is also known as an: ESU = Electro Surgical Unit

Electrosurgical machine: scientific principles

Electrosurgery is accomplished by converting high frequency electrical current into heat, caused by the tissue resistance to the passage of electrical current (the tip of the active electrode is not hot!).

As current must pass through the body, at least two electrical connections must be made between the patient and the machine. The power needed is up to 400 watts.

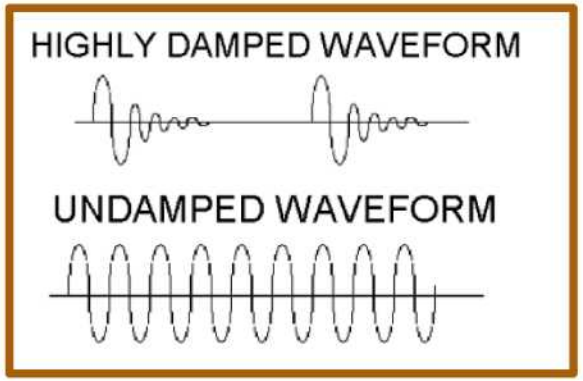

- If the waveform is damped it will coagulate blood and stop bleeding (coag setting).
- If the waveform is undamped the tissue is ablated (vaporizing the water content) leaving a void or cut or incision (cut setting).

high frequency electrical current is used to avoid exciting the body cells electrically.

Inventor: William T. Bovie (1882-1958), Boston, USA

In all electrosurgery procedures there is the smell of burning flesh and smoke

Electrosurgical machine: four common techniques

1. **electro-dessication**
   a highly damped waveform is supplied to the contact point, active electrode, a ball, needle or blade which is placed on the tissue before energizing and produces coagulation around the site.
2. **electro-fulguration**
   a highly damped waveform is used but the active electrode is held 1 to 2 mm above the tissue and - when energized - sparks spray the area drying it out and leaving some burning of cell edges.
3. **electro-section**
   an undamped waveform is applied to the active electrode, which is placed on the tissue surface creating an incision.
4. **electro-coagulation**
   a damped waveform is delivered to the patient to stop bleeding without doing any additional cutting.

dessicate
to dry out thoroughly

fulgurate
the destruction of small growths or areas of tissue using diathermy.

section
also: slice, segment, part, ...

coagulate
change to a solid or semi-solid state.
also: *congeal*, *clot*, *solidify*, *thicken* ...

Electrosurgical machine: monopolar electro-surgery

All electrosurgery techniques require two connections to the patient, the active electrode (or pen, or bovie pen) and the reference electrode (or dispersive or ground electrode).

For monopolar electro-surgery, the reference electrode is placed under the patient and the active electrode is held in the surgeon's hand.

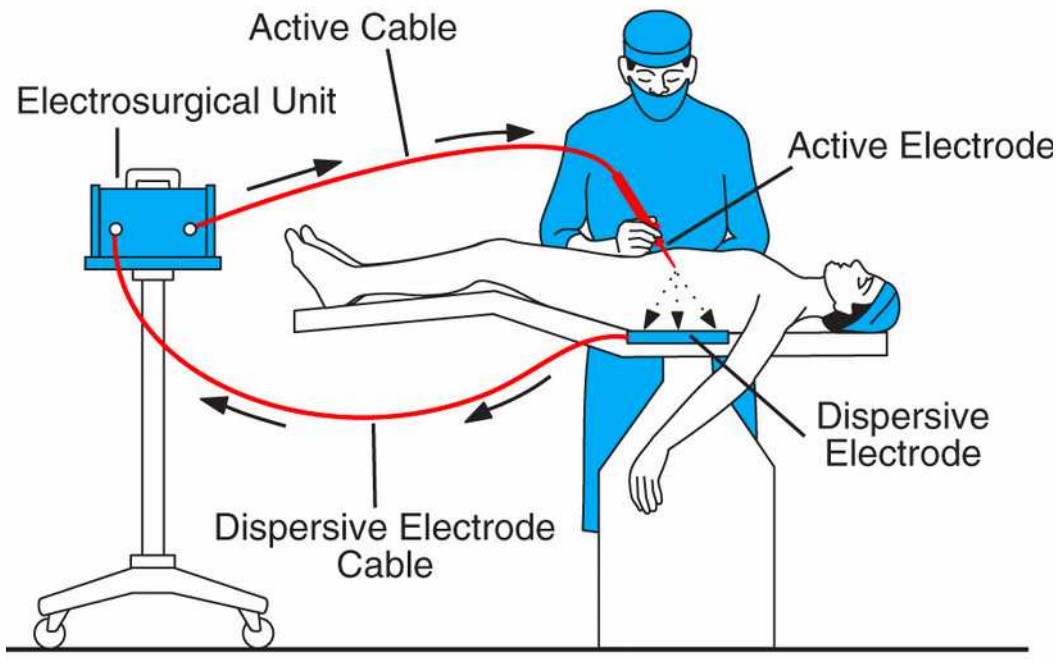

low heating at dispersive electrode!

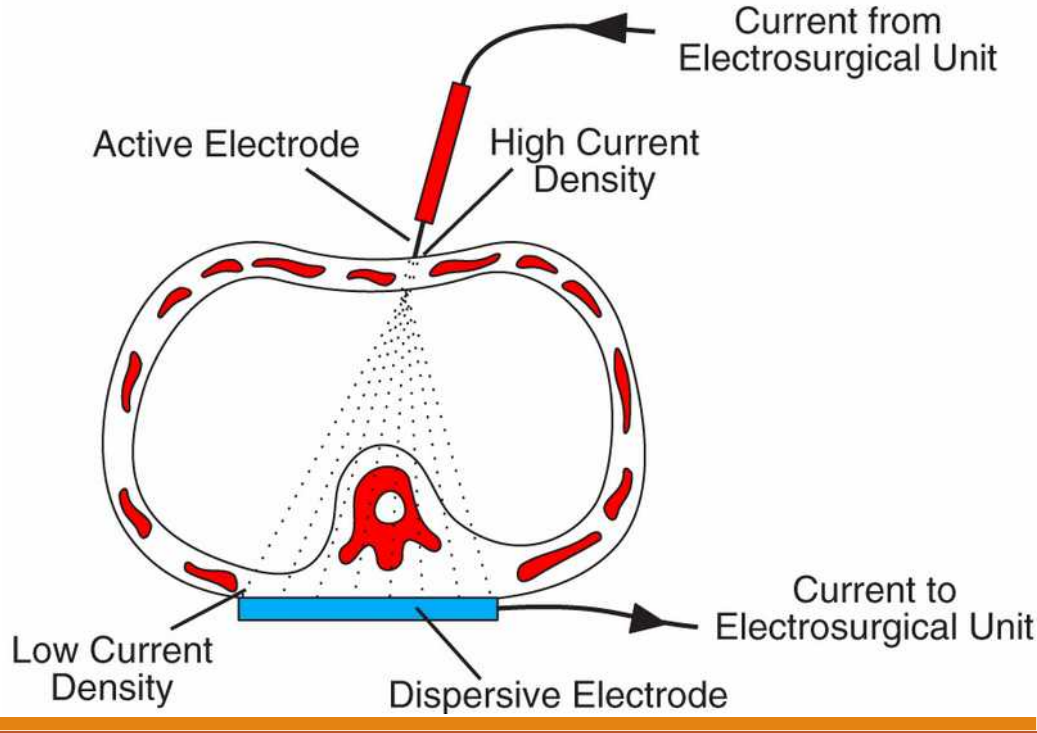

Electrosurgical machine: bipolar electrosurgery

For bipolar electrosurgery, the reference and active electrodes are both held by the surgeon in one combined pen.

Electrosurgical current in the patient is restricted to a small volume of tissue in the immediate region of application of the forceps.

Bipolar is most commonly used with small vessels and for precise tissue destruction.

The bi-polar function may not be available on all electrosurgical generators. If it is contained in the same unit as the mono-polar, it will have separate connections and possibly separate controls from the mono-polar functions.

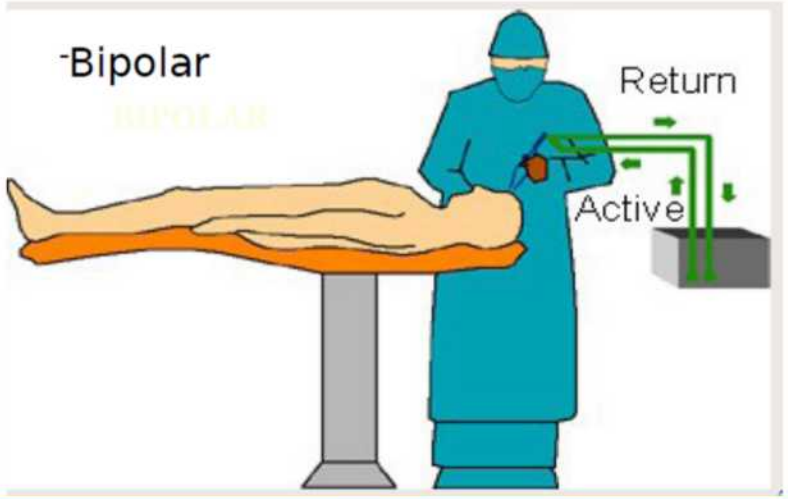

Electrosurgical machine: use

The Bovie pen (or ESU pen) is held on the patient by the surgeon.

The dispersive electrode can be a metal plate covered with a conductive gel or saline soaked cloths.

Many are now using single use dispersive electrodes. Single use devices are often pre-gelled, conductive adhesive pads that include multiple connections to the machine. The multiple connections are used to allow the device to constantly check for a good contact between the patient and the dispersive electrode.

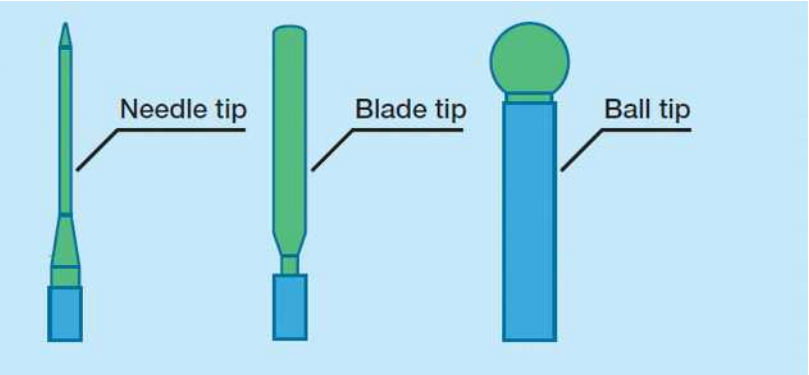

Poor contact with the dispersive electrode is the most common cause of unintentional patient burns. In modern ESU machines, the dispersive electrode must touch the patient to prevent an alarm.

Electrosurgical machine: construction

The generating unit itself is often called a Bovie. It is generally a solid state device that can produce 300 to 3000 kilo Hertz. Most machines produce 25-200 Watts. Conceptually, the Bovie breaks up the 50 Hz from the wall into many shorter pulses, then uses a transformer to generate the high voltage required (figure).

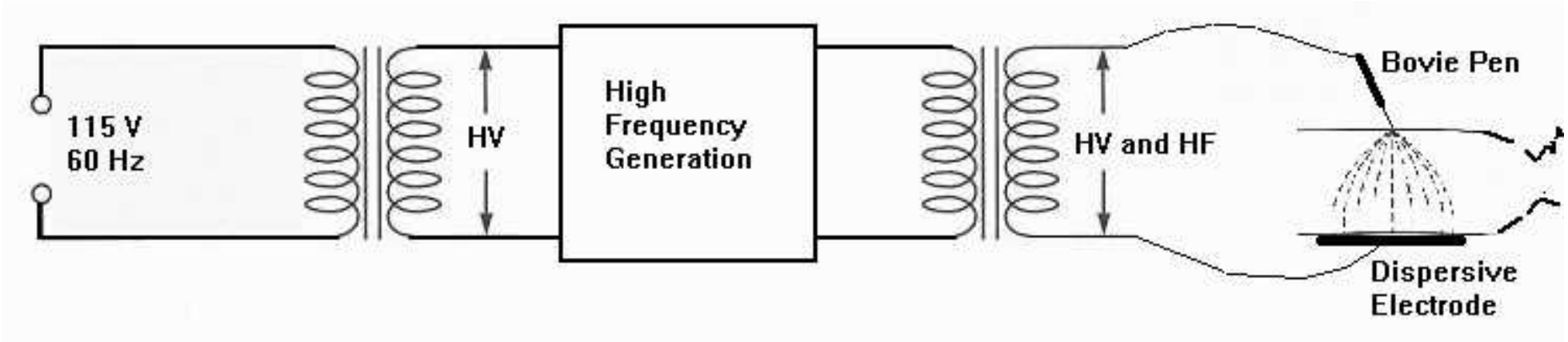

Activation of the electrosurgery is done by the surgeon using either a hand switch on the bovie pen or by stepping on a foot switch. Both have two contacts one labelled CUT for electro-section and the other COAG for electro-dessication or electrofulguration.

Electrosurgical machine: Construction

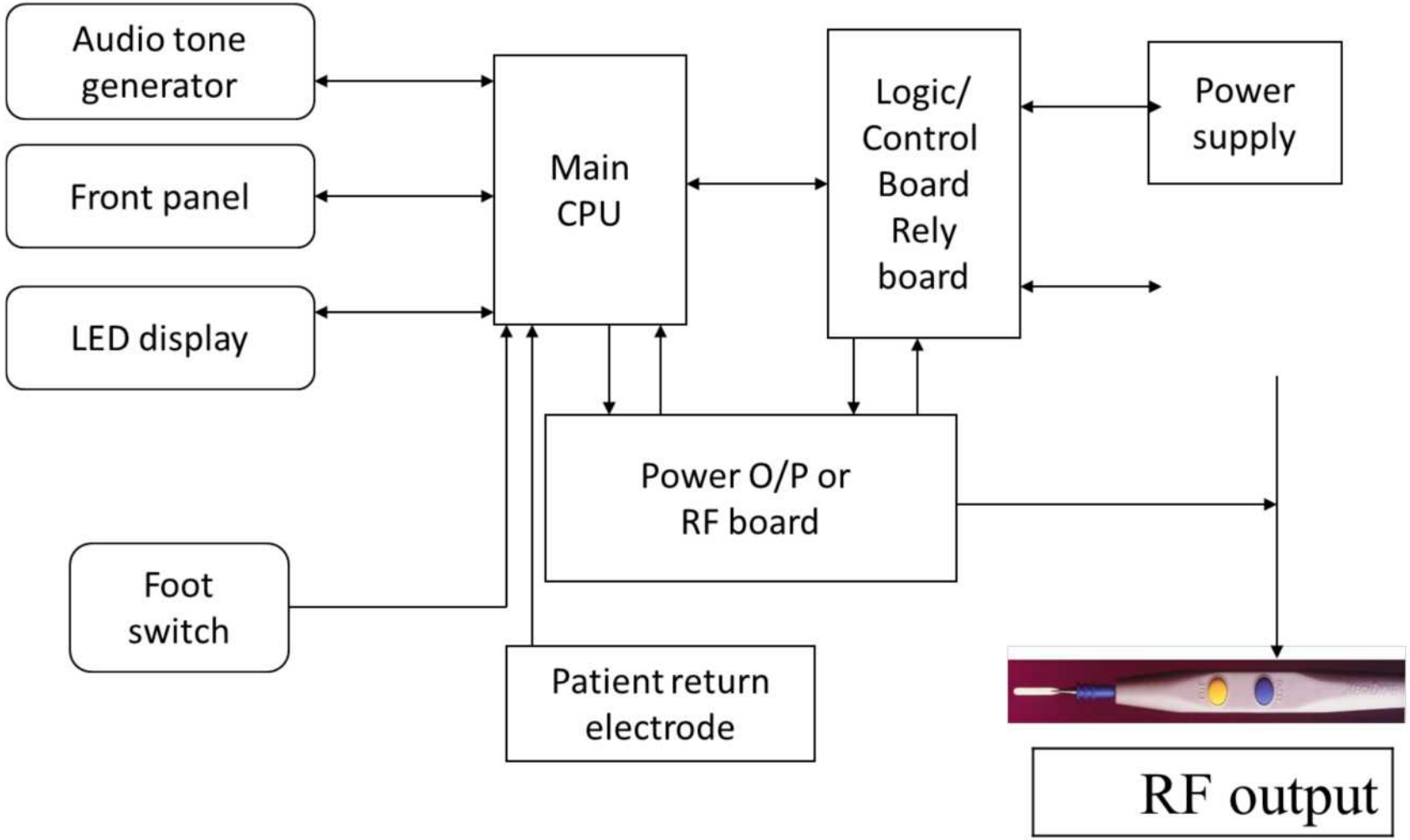

Troubleshooting

The most common problems in electrosurgery are:

- burns, excessive tissue damage, damage to alternate sites (areas of the patient's body other than the target surgical site)
- fires
- interference with other devices.

Skin burns are the most frequently reported of these problems, usually occurring at the return electrode site. Partial or complete detachment of the electrode pad from the patient is the most common cause. The dispersive electrode should always be placed on an area of the body that has good blood flow and is not subject to high weight concentration. The side of the thigh is a very common location, under the buttocks is not a good location as it generally is a high weight bearing point.

In older machines, the lack of contact with the electrode may not be detected by the system. The effect can be patient burns where the electrical current finds an alternative path to ground. In newer machines, the generator has two connections to the dispersive electrode. When connected to the patient, a small current is passed between the two halves of the dispersive electrodes. When not properly connected to the patient, the current cannot pass and an alarm will sound.

Electrosurgical machine: Trouble shooting

If the **tip is dirty**, there can be little, or no, current passing through the patient. The bovie pens are not intended to be reused. However, they are often reused in the developing world.

In addition to problems with dirty tips, the **wires** become **broken** with reuse. They are simple wires which can be re-soldered for repairs.

If the wire break is in the pen, the pen can be taken apart, the wires reconnected and the pen glued together

Electrosurgical machine: Preventive maintenance

The most important action in preventive maintenance is to keeping the inside and outside of the machine **clean**. Check the plate electrode, the leads, and the instruments.

If the physician wishes a different tip for a monopolar electrosurgery unit, it is sufficient to connect any metal tip to the existing tip. Insure that the connection is electrically and mechanically sound to the existing tip and pen.

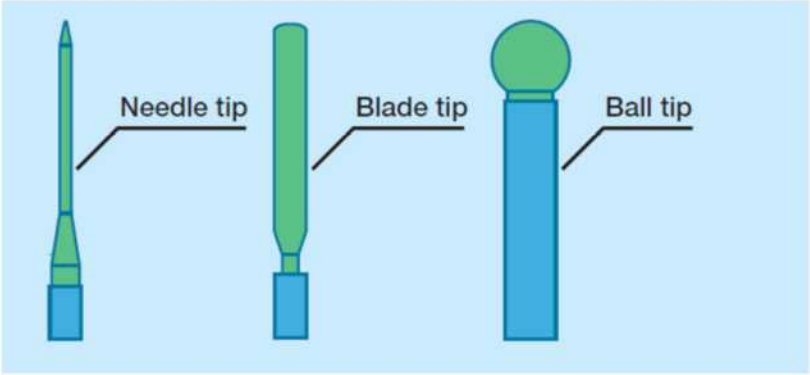

Electrosurgical machine: Safety considerations

The ESU is inherently a potentially **dangerous** device. All members of the surgical team using an ESU must be fully aware of the hazards, understand the principles of operation and safe handling, and be familiar with the abilities and limitations of their particular unit (training !)

The main risks associated with electrical surgery

- **Burns**
- **Electrical interference** with the **heart muscle**
- **Explosion/fire** caused by sparks and
- Electrical interference with **pacemaker** and other medical equipment.

Sparks are a common occurrence when electrosurgery is in use. When oxygen is being administered to the patient, it may leak, creating an atmosphere where fires can quickly ignite. The drapes covering the patients should be flame retardant but will burn under the right conditions. Special care is required when doing neck or mouth surgery to avoid a flash fire.

Electrosurgical machine: Performance monitoring

An electrosurgery unit can be checked and calibrated easily and efficiently through the use of an **electrosurgery tester**.

- You cannot test the device by performing the operation on a resistor in most cases. Although 400 Ohms would work, only a resistor with a very large power rating will survive the procedure. Such large power resistors are generally not available in the developing world.

In most cases, a bar of soap or a fresh piece of citrus fruit (like an orange) can be used to do your initial testing. Be sure that both sides of the dispersive electrode are touching to prevent an alarm.

In many cases, you will want a final test on meat. A reasonable final test is to cut a raw piece of chicken, pork or beef. Be sure that the indifferent electrode is touching the meat before testing. Both sides of a split dispersive electrode must touch the meat to avoid an alarm! It is best to conduct the final test with the physician present. In this way, you can not only assure that the device is minimally operating, but you can also be sure that it is operating in a manner that satisfies the physician.

For more modern units, insure that the dispersive electrode alarm is working by disconnecting half of the electrode from the meat, or pulling the dispersive electrode out of the machine.

Electrosurgical machine: Performance monitoring

The performance and safety of electrosurgical devices must be verified every 3-6 months

A typical test procedure can consist of the following test steps:

1. Visual inspection
2. Low-frequency electrical safety test (leakage currents up to 1kHz),
3. Verification of the **contact quality monitoring** (CQM) circuit (Return Electrode Monitoring)
4. Testing for high frequency leakage
5. Check output power at certain loads in relation to the function and waveform selection

Contact quality monitoring (CQM) verification

This is monitored by the electrosurgical device through impedance measurement (CQM) between the two (split) or more conductive pads within the patient return plate. When extreme variations or very high/low impedance appears, the CQM will lead to an audible / visual alarm and can lead to deactivation of the output energy to prevent potential patient injury

Electrosurgery Links

Electrosurgical Principles

- https://www.youtube.com/watch?v=7LW78yoaEe0

Principles of Electrosurgery in Laproscopy

- https://www.youtube.com/watch?v=mqmvaKxfq3A

Understanding Electrosurgery

- http://www.boviemed.com/products_boviemed_lit/pdfs/aaron_understanding_sc.pdf

Electrosurgery Manual
http://
www.klsmartin.com/fileadmin/Inhalte/Downloads_Prospekte/HF-Geraete/90-604-02-04_09_06_Handbuch_HF.pdf

Electrosurgical Checklist

- http://mdsr.ecri.org/summary/detail.aspx?doc_id=8271

Electrosurgery Self-study guide

- http://www.covidien.com/pace/clinical-education/273622

END

The creation of this presentation was supported by a grant from THET:
see https://www.thet.org/

THET
PARTNERSHIPS FOR GLOBAL HEALTH